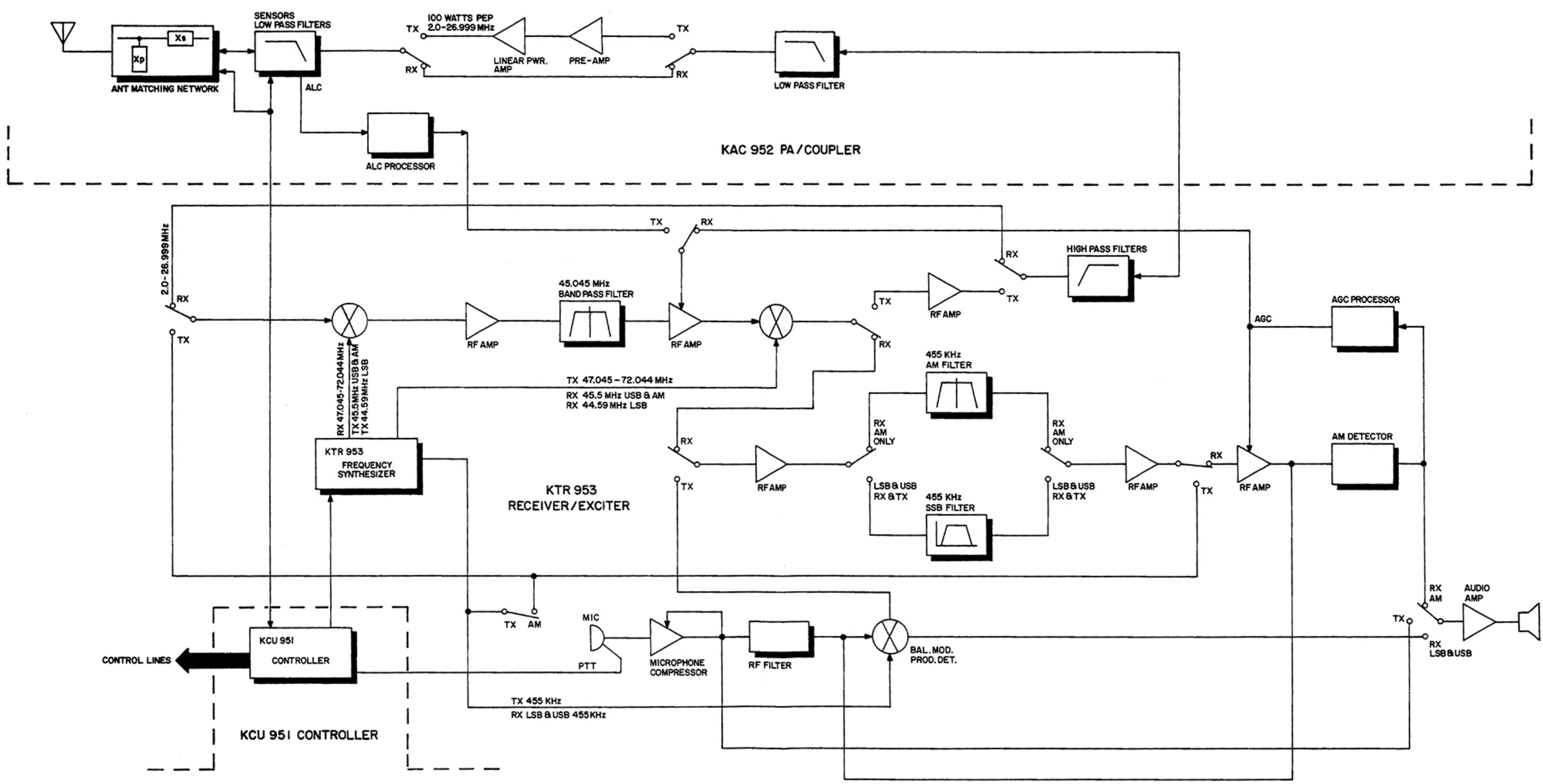
SENSORS
LOW PASS FILTERS
Xs
Xp
ANT MATCHING NETWORK
ALC
100 WATTS PEP
2.0-26.999 MHz
TX
RX
LINEAR PWR. AMP
PRE-AMP
LOW PASS FILTER
ALC PROCESSOR
KAC 952 PA/COUPLER
2.0-26.999 MHz
HIGH PASS FILTERS
45.045 MHz
BAND PASS FILTER
RF AMP
AGC
AGC PROCESSOR
455 KHz
AM FILTER
TX 47.045-72.044 MHz
RX 45.5 MHz USB & AM
RX 44.59 MHz LSB
RX 47.045-72.044 MHz
TX 45.5 MHz USB & AM
TX 44.59 MHz LSB
KTR 953
FREQUENCY SYNTHESIZER
RX AM ONLY
LSB & USB
RX & TX
455 KHz
SSB FILTER
AM DETECTOR
KTR 953
RECEIVER/EXCITER
AM
MIC
PTT
MICROPHONE COMPRESSOR
RF FILTER
BAL. MOD.
PROD. DET.
AUDIO AMP
RX LSB & USB
TX 455 KHz
RX LSB & USB 455 KHz
KCU 951
CONTROLLER
CONTROL LINES
KCU 951 CONTROLLER